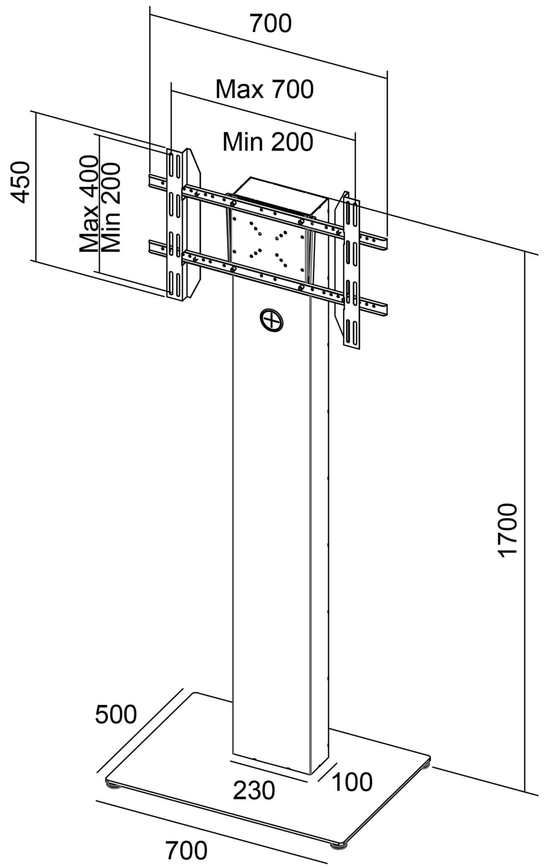
700
Max 700
Min 200
450
Max 400
Min 200
1700
500
230
100
700

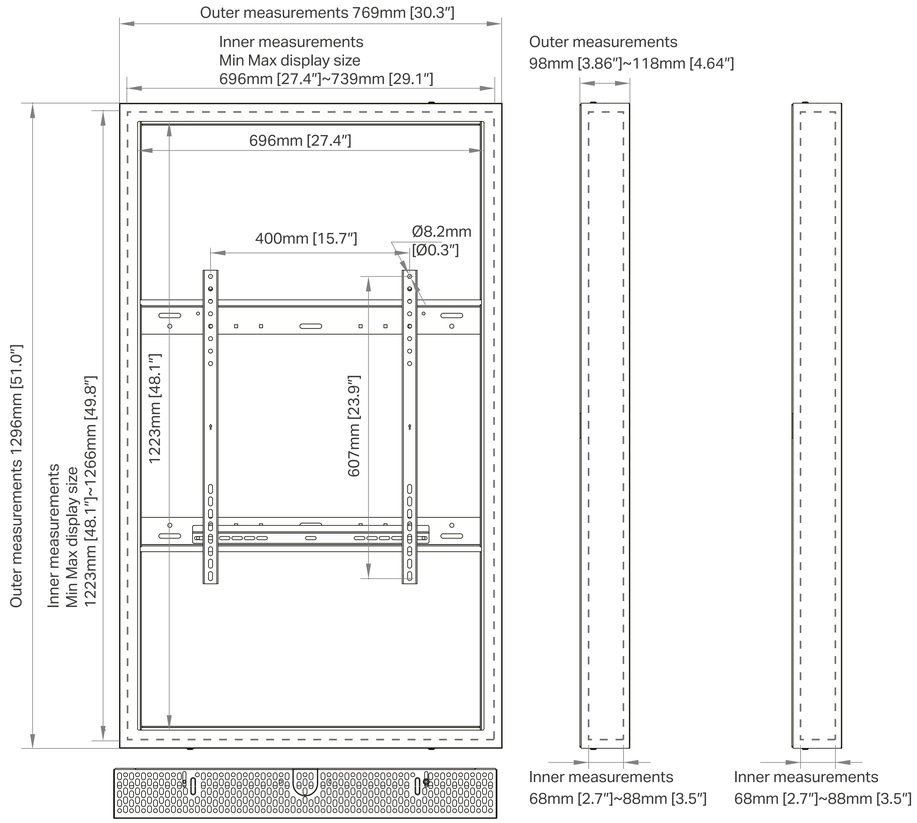
Outer measurements 769mm [30.3"]
Inner measurements
Min Max display size
696mm [27.4"]~739mm [29.1"]
Outer measurements
98mm [3.86"]~118mm [4.64"]
696mm [27.4"]
400mm [15.7"]
Ø8.2mm
[Ø0.3"]
Outer measurements 1296mm [51.0"]
Inner measurements
Min Max display size
1223mm [48.1"]~1266mm [49.8"]
1223mm [48.1"]
607mm [23.9"]
Inner measurements
68mm [2.7"]~88mm [3.5"]
Inner measurements
68mm [2.7"]~88mm [3.5"]

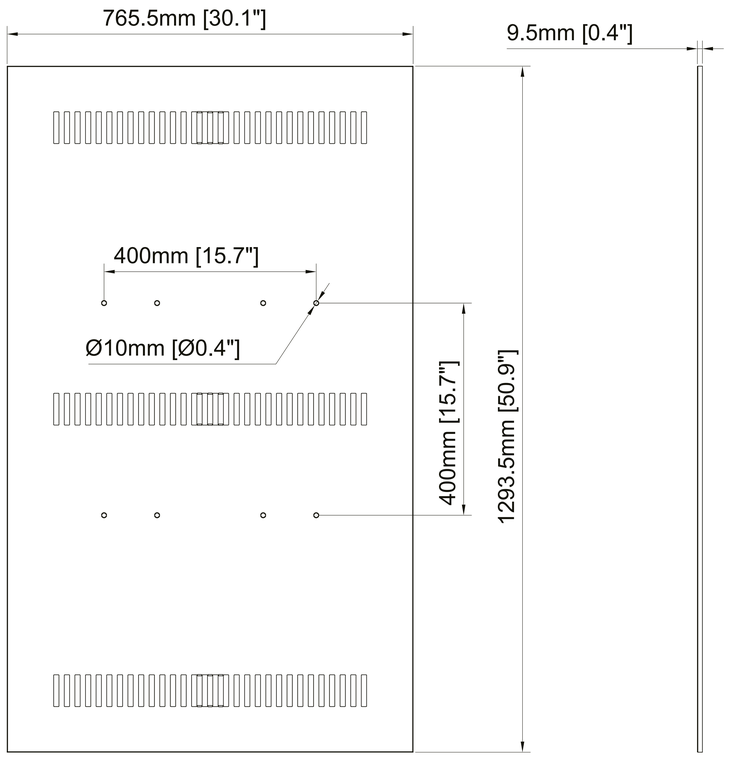
765.5mm [30.1"]
9.5mm [0.4"]
400mm [15.7"]
Ø10mm [Ø0.4"]
400mm [15.7"]
1293.5mm [50.9"]