6V_4518U_55_HTV_EU_193x159_T32_v0.1_20230420

PART	COLOUR	TECHNIQUE	CHANGES / REMARKS	V
I PHILIPS LOGO	PANTONE Cool Gray 3C	SILKSCREEN PRINTING	ON HIGH GLOSS SURFACE	00
J STICKER AREA		INMOLDED	ON POLISHED SURFACE	00
K ALL TEXTS, ICON AND CAUTION LABELS		ENGRAVED	ENGRAVED 0.3 (DEPTH 0.3 MM)	00

LABEL IO TEXT FONTS: Neue Frutiger World Bold 10/8 pt

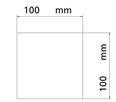

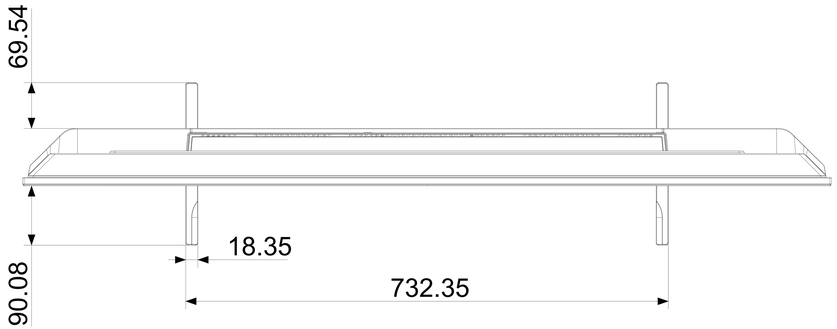

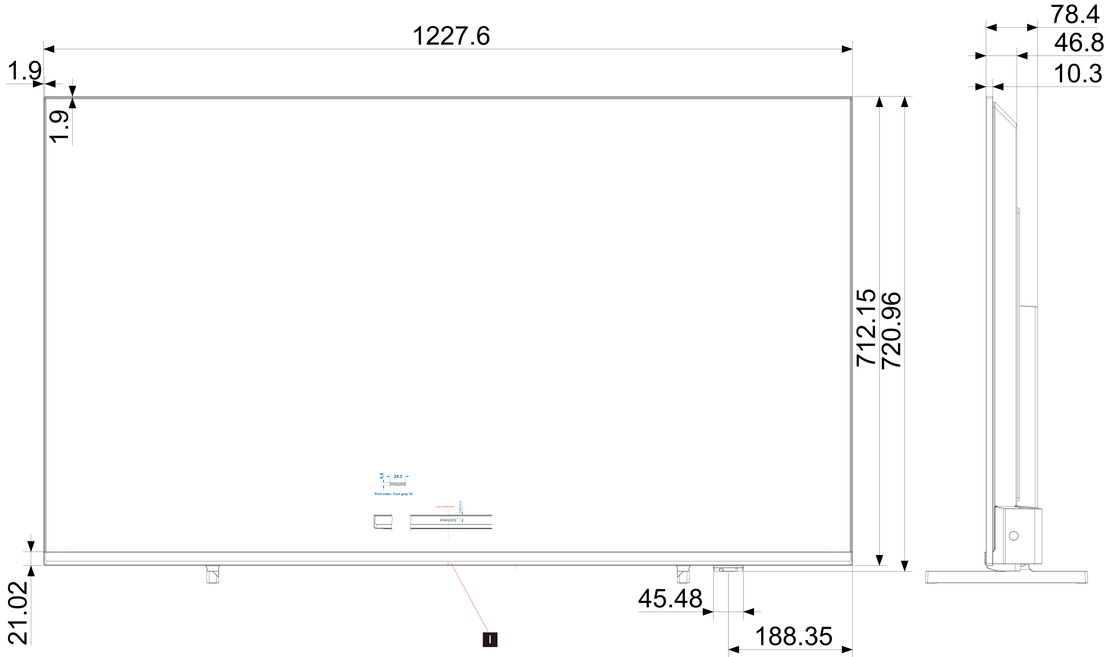

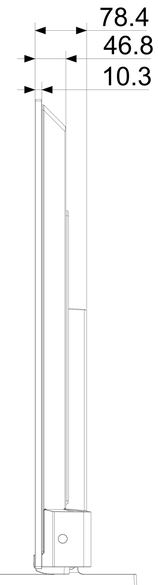

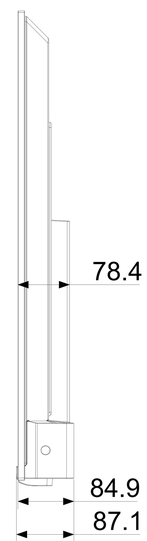

K

NOTE :
FOR AREAS TO BE ENGRAVED ARE IN BLACK WHILST
FOR NON-BLACK AREAS REMAIN IN NORMAL SURFACE.

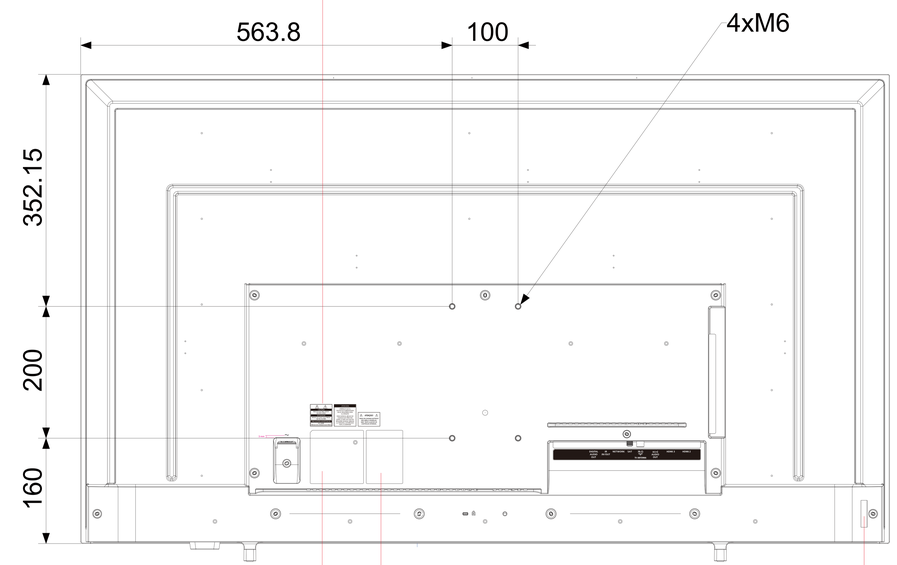

Sticker area with Matt surface.

J Sticker area with Polished surface.

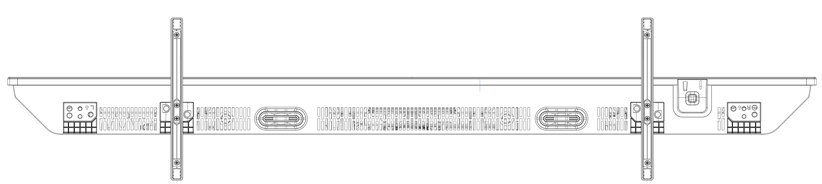

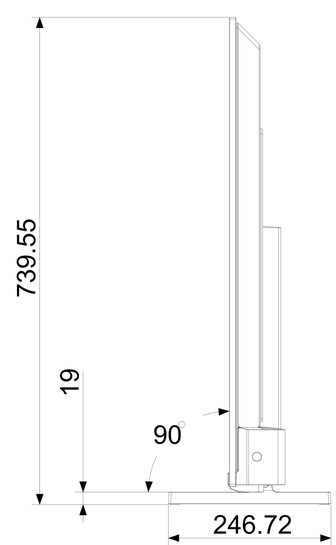

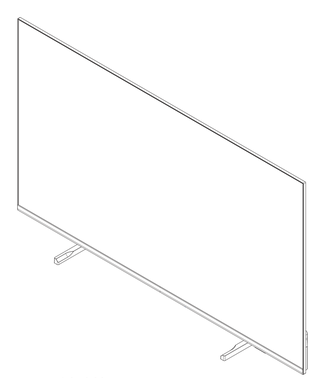

比例 0.500

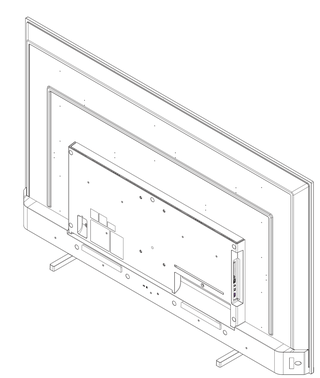

比例 0.500